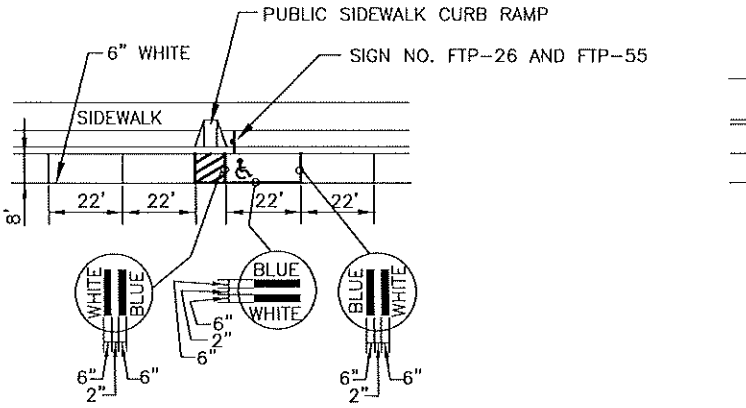

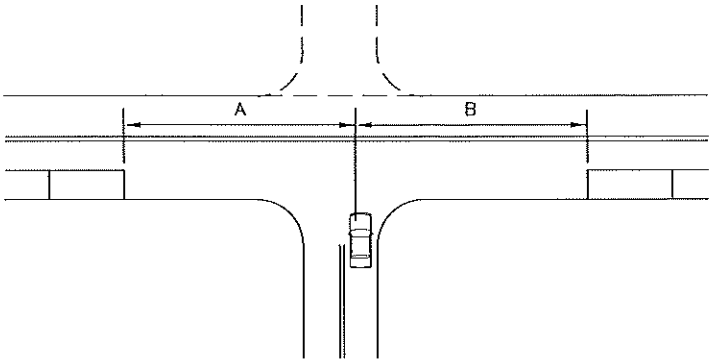

SPEED MPH	SPEED KM/H	UP STREAM (A)	DOWN STREAM (B) 2 LANE	4 LANE
0–30	0–50	84'	59'	45'
35	60	98'	69'	49'

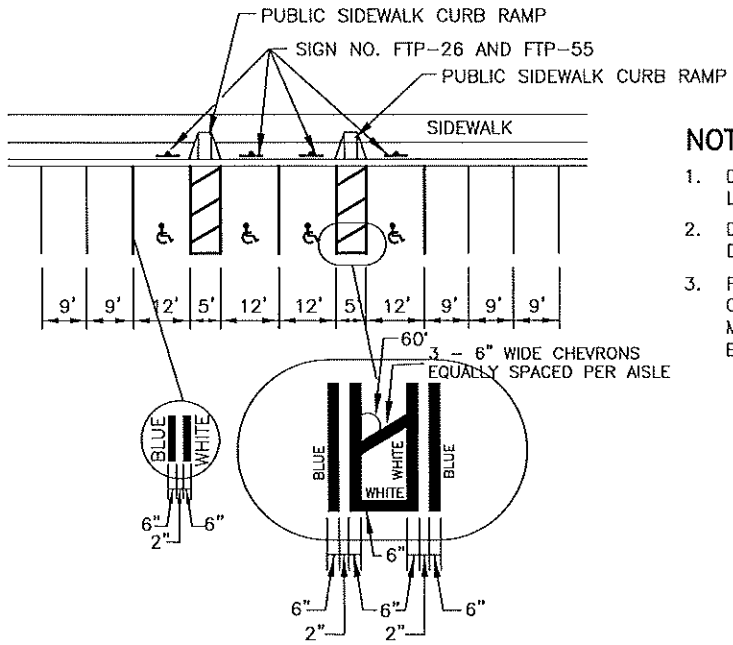

NOTES:

1. DISTANCES MEASURED LONGITUDINALLY ALONG THE STREET FROM DRIVER LOCATION OF ENTERING VEHICLE TO END OF PARKING RESTRICTION.
2. DISTANCES APPLICABLE TO INTERSECTING STREET, MAJOR DRIVEWAYS AND OTHER DRIVEWAYS TO THE EXTENT PRACTICAL.
3. FOR NON-SIGNALIZED INTERSECTIONS, THE VALUES ABOVE SHALL BE COMPARED WITH THE VALUES FOR SIGNALIZED INTERSECTIONS AND THE MAXIMUM RESTRICTIONS IMPLEMENTED. THESE RESTRICTIONS APPLY TO BOTH ACCESSIBLE AND NON-ACCESSIBLE PARKING.

MINIMUM PARKING RESTRICTION FOR NON-SIGNALIZED INTERSECTIONS

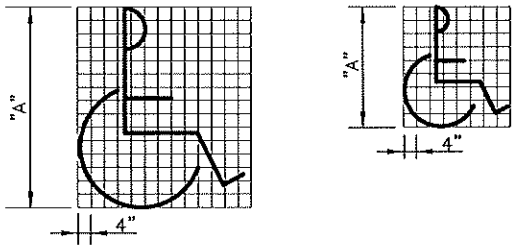

USE OF PAVEMENT SYMBOL IN ACCESSIBLE PARKING SPACES IS OPTIONAL, WHEN USED THE SYMBOL SHALL BE 3' OR 5' HIGH AND WHITE IN COLOR.

"UNIVERSAL SYMBOL OF ACCESSIBILITY"

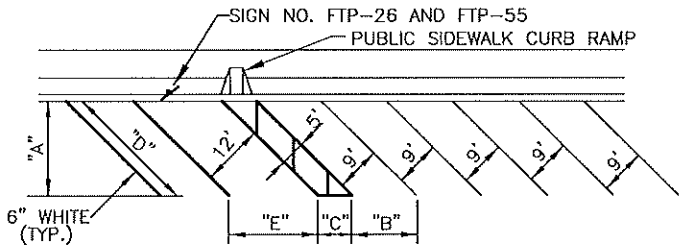

△ °	"DIMENSIONS" "A"	"B"	"C"	"D"	"E"
45°	19	13	7.5	26.9	17.4
60°	20	10.6	6.2	23.3	14.1

NOTES:

1. DIMENSIONS ARE TO THE CENTERLINE OF MARKINGS.
2. AN ACCESS AISLE IS REQUIRED FOR EACH ACCESSIBLE SPACE WHEN ANGLE PARKING IS USED.
3. CRITERIA FOR PAVEMENT MARKINGS ONLY, NOT PUBLIC SIDEWALK CURB RAMP LOCATIONS, FOR RAMP LOCATIONS REFER TO PLANS.
4. BLUE PAVEMENT MARKINGS SHALL BE TINTED TO MATCH SHADE 15180 OF FEDERAL STANDARDS 595A.
5. THE FTP-55 PANEL SHALL BE MOUNTED BELOW THE FTP-26 SIGN.

PAVEMENT MARKING FOR PUBLIC SIDEWALK CURB RAMPS IN REST AREAS

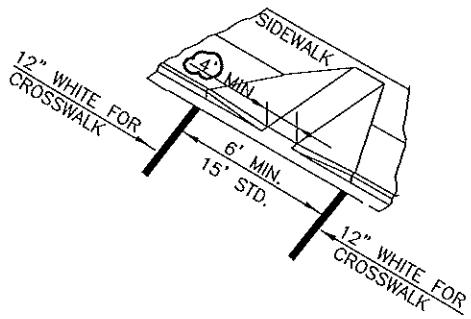

TYPICAL MARKINGS FOR CROSSWALKS

ADOPTED BY CITY COUNCIL	CITY OF CAPE CORAL PUBLIC WORKS DEPARTMENT ENGINEERING DESIGN STANDARD	TITLE	SHEET NO.
DRAFT		PARKING MARKINGS AND STRIPING	E-4
		REVISIONS: 08-31-2020	

G:\Engineering Design Standards\UPDATED STANDARDS\E - PARKING LOTS\shte-4.dwg, 7/2/2020 2:05:48 PM, Adobe PDF